ITEM	DESCRIPTION	QTY	PART NUMBER
–	WELD PREP DETAILS		----

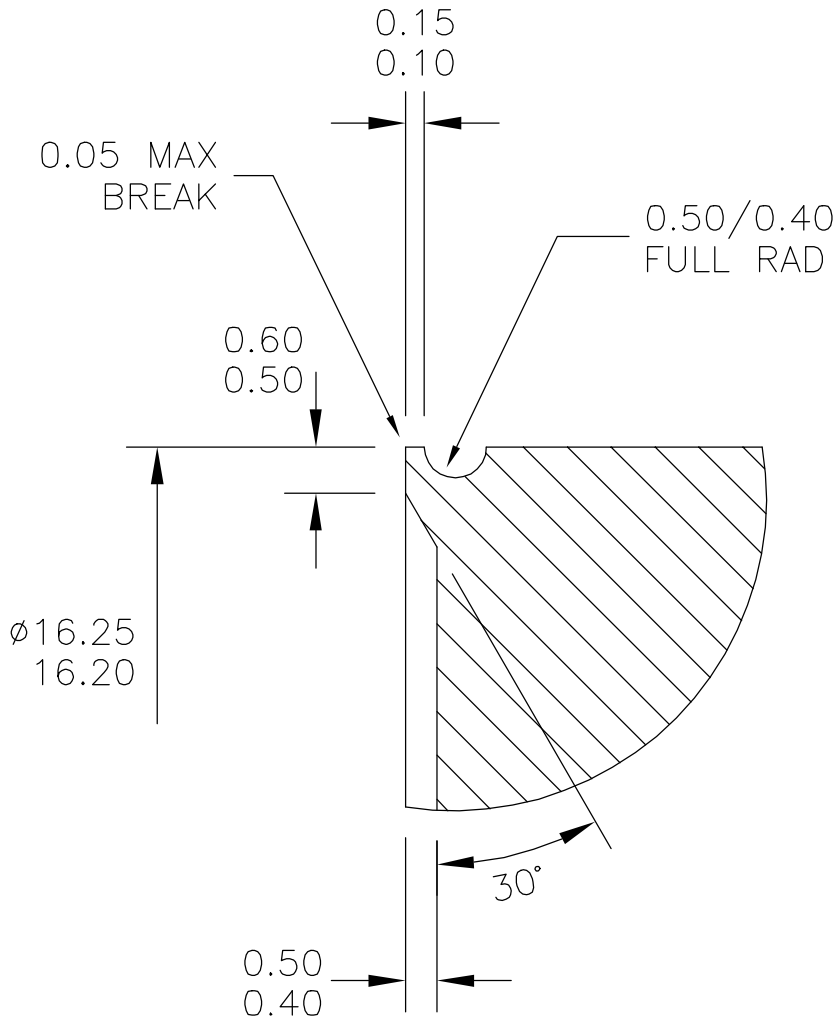

OR

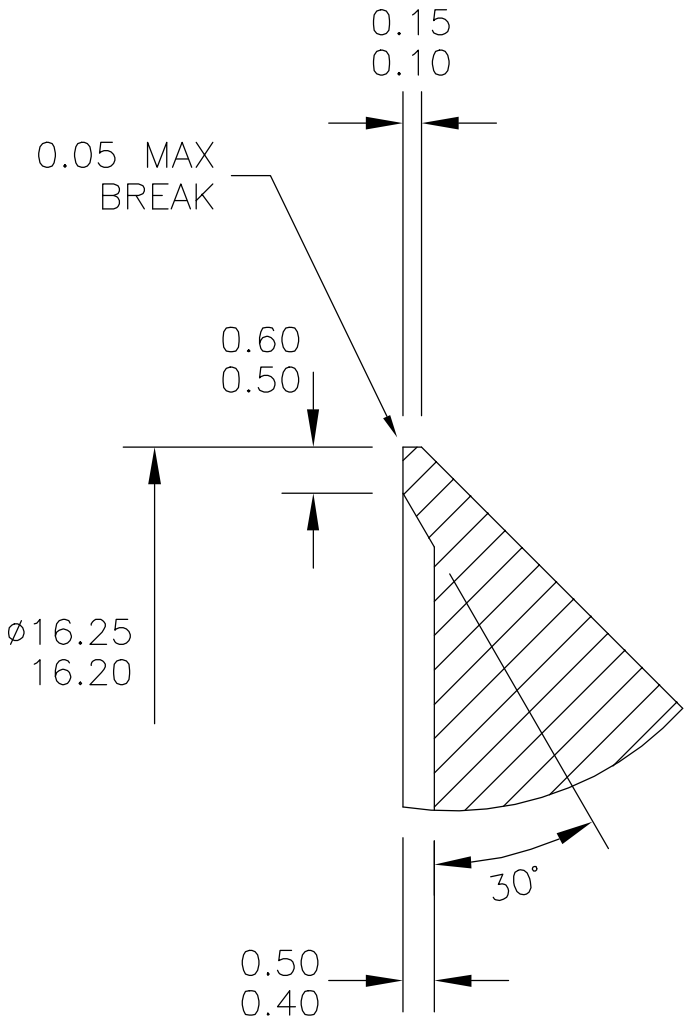

REV	ECN	DRAWN	APPD	DATE
----	SKETCH		----	20/10/03

CONFIDENTIALITY

THE INFORMATION DISCLOSED IN THIS DRAWING IS PROPRIETARY & REMAINS THE PROPERTY OF EWB SOLUTIONS. DISCLOSURE &/OR REPRODUCTION BY ANY METHOD IS NOT PERMITTED WITHOUT OBTAINING WRITTEN AUTHORISATION

TOLERANCES

UNLESS OTHERWISE STATED

0 DEC PLACES	±0.25
1 DEC PLACE	±0.10
2 DEC PLACES	±0.05
ANGLES	±2°

MACHINED SURFACES 0.8

THIRD ANGLE PROJECTION

UNLESS OTHERWISE SPECIFIED ALL DIMENSIONS ARE IN MM & SURFACE FINISHES IN μM Ra

COMMON CENTRE LINES SHALL BE WITHIN 0.25

BREAK ALL SHARP EDGES 0.10/0.20

FILLETS & CORNERS SHALL BE 0.40 MAX

EWB Solutions

TITLE WELD PREP DETAILS

MATERIAL	DRWG NO	REV
-----	D07WP	–